STANDARD FEATURES

HESTAN

48”RANGETOP

- Heavy-duty cast-iron grates provide a continuous uninterrupted and maximized cooking surface for best in class coverage. In combination with brass sealed burner and burner bowl, designed to optimize combustion efficiency to produce top cooking performance, including the fastest time-to-boil.
- Award winning CircuFlame™ brass sealed center power burner provides 30,000 Btu/hour of high-performance cooking power, featured in Michelin starred restaurants and used by the top chefs around the country.

Model Number as shown
KRT485GD

CircuFlame™ Burner (365 only)

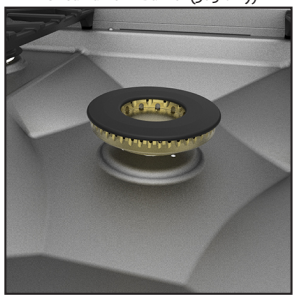

Electric Griddle

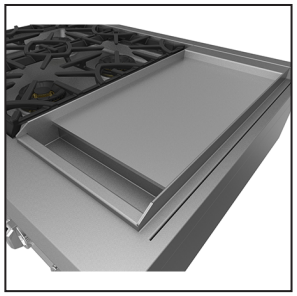

Simmer Flame at 500 Btu

- High performance dual-flow burner system allows for significant turndown capability from high Btu performance (23,000 Btu/hour *Front Burners*) to low continuous simmer (500 Btu/hour *All Burners*). - NG
- Patent pending, diamond stainless steel burner bowl, emphasizes the CircuFlame™ power burner. Allows for ease of cleaning with a water tight seal. - 5 burner (365) configuration only.
- Exclusive raised pattern burner cap design that is easy to remove and clean.
- Robust electronic ignition/re-ignition capability to provide safety and proper gas ignition. Igniter will continue to spark until the burner flame is established, and re-ignite in the case of flame blow out.
- Industry exclusive Marquise™ accented control panel.
- Elegantly backlit patent-pending control knobs add functionality and brilliant illumination.
- Zamak die-cast control knobs.
- 1/4” thick stainless steel robotically welded griddle plate.
- High Performance, electrically powered heating element up to 1650 watts.
- Thermostatically controlled.
- Teflon coated front grease tray for ease of cleaning.
- Comes standard with Island Trim.

OPTIONS & ACCESSORIES

- Available in Twelve (12) Hestan signature color finishes
- Backguards : Low Back 10” and High Shelf 20”
- Natural Gas (NG) or Liquid Propane (LP)
- Gas conversion kits (NG/LP)
- High altitude kit

48”RANGETOP

www.hestanhome.com phone 888.905.7463 3375 E. La Palma Ave., Anaheim, CA 92806

INSTALLATION CLEARANCES WITH ISLAND TRIM

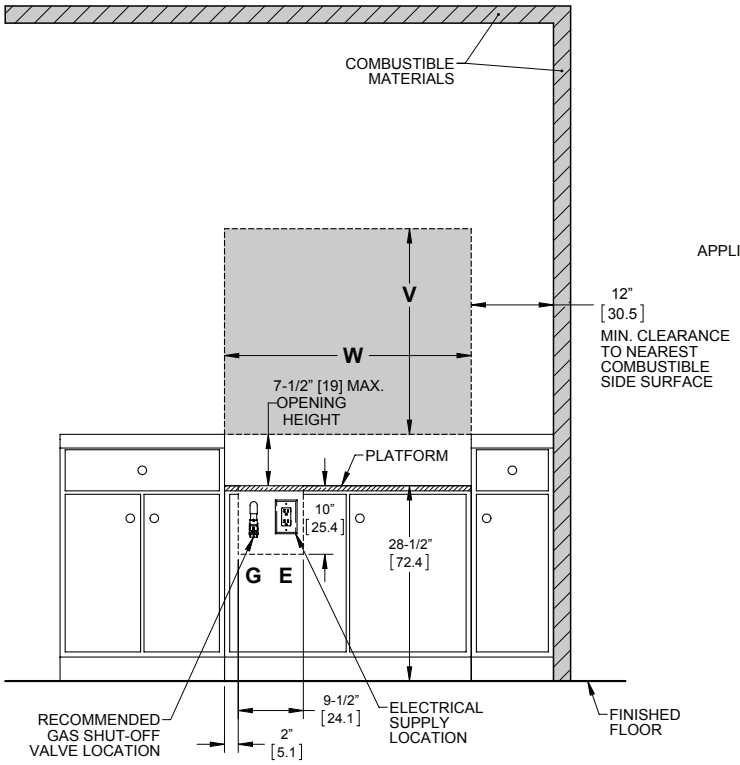

FRONT VIEW

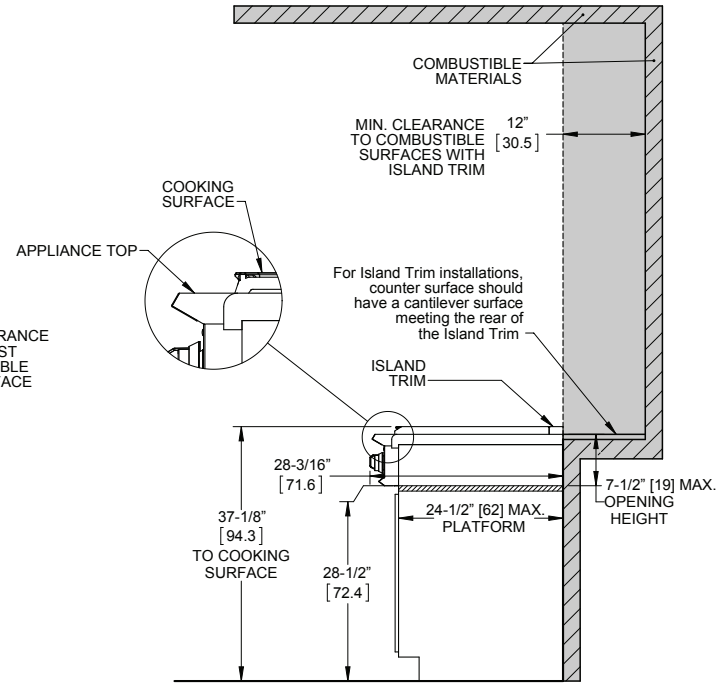

SIDE VIEW

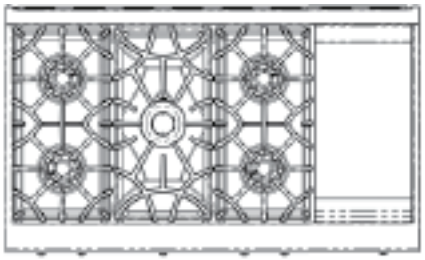

NOTES:
* SHADED AREAS INDICATE WHERE COMBUSTIBLE MATERIALS ARE NOT ALLOWED.
* APPLIANCE TOP MUST BE LEVEL OR HIGHER THAN THE ADJACENT COUNTERTOP SURFACES.
* "G" IS GAS CONNECTION ZONE ON REAR WALL. MOUNT SHUT-OFF VALVE IN THIS ZONE FOR EASY ACCESS WHEN RANGETOP IS INSTALLED.
* "E" IS ELECTRICAL SUPPLY ZONE.
* "W" IS APPLIANCE OPENING.
* "V" IS MIN. CLEARANCE TO REQUIRED VENTILATION HOOD OR COMBUSTIBLE SURFACE.

DIMENSIONS IN BRACKETS [ ] ARE IN CM.

RANGETOP MODEL	W	V(min)
KRT485GD	48" [121.9]	30" [76.2]

GAS REQUIREMENTS : ½" NPT gas connection. Minimum gas supply is 7" water column for natural gas and 11" for propane. Operating pressure at the manifold is 5" water column for natural gas and 10" for propane. All units require a regulated gas supply. (included)

ELECTRICAL REQUIREMENTS :
120V, 60Hz, 20 amps

Hestan Indoor products are approved for indoor use only. Hestan Commercial Corporation reserves the right to change materials and specifications without notice. Specify type of gas when ordering.

All Models	Description	Cutout Dimensions W (in.)	D (in.)	H (in.)	Total Btu's	Griddle Wattage	Approx SHP WT (lbs)
KRT485GD -NG /-LP	48" Rangetop, 5 Burner with Griddle	48"	24½" + platform required	7⅜"	107,000	1650W	260

Intertek