AGGP: GRIDDLE PLATE ACCESSORY FOR GRILL

HESTAN

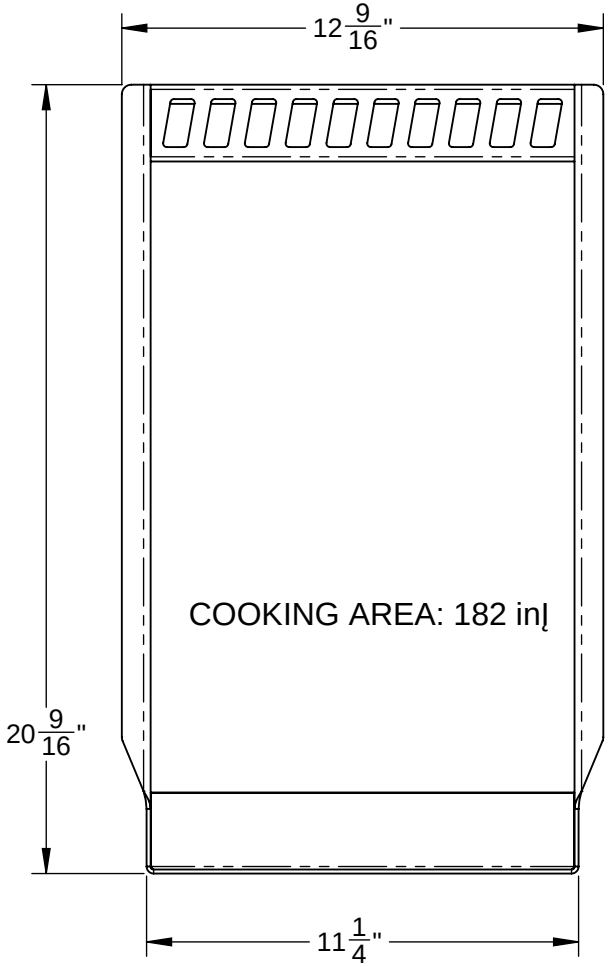

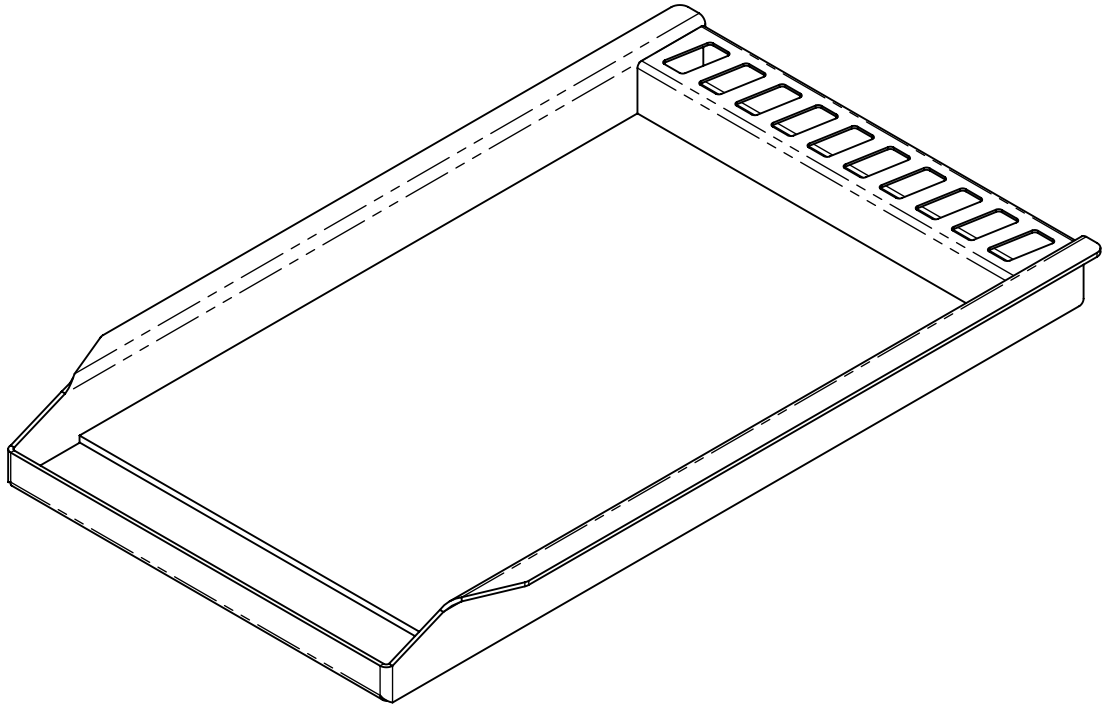

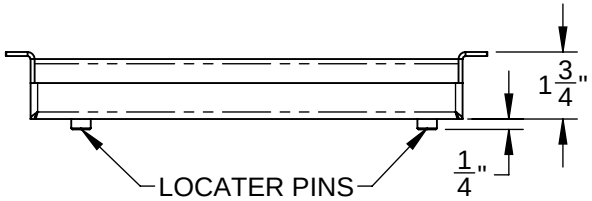

NOTE: ONLY ONE PLATE CAN BE USED IN THE GRILL.
MULTIPLE PLATES MAY DAMAGE YOUR GRILL.

Revised: 11/30/2018