Dishwasher

KDW24
Parts List

Hestan Commercial Corporation
3375 E. La Palma Ave.
Anaheim, CA 92806
(888) 905-7463
RETAIN THIS FOR FUTURE REFERENCE

©2018 Hestan Commercial Corporation P/N: KDW24-SERVICE REV A

Last Revised: 7/13/2018

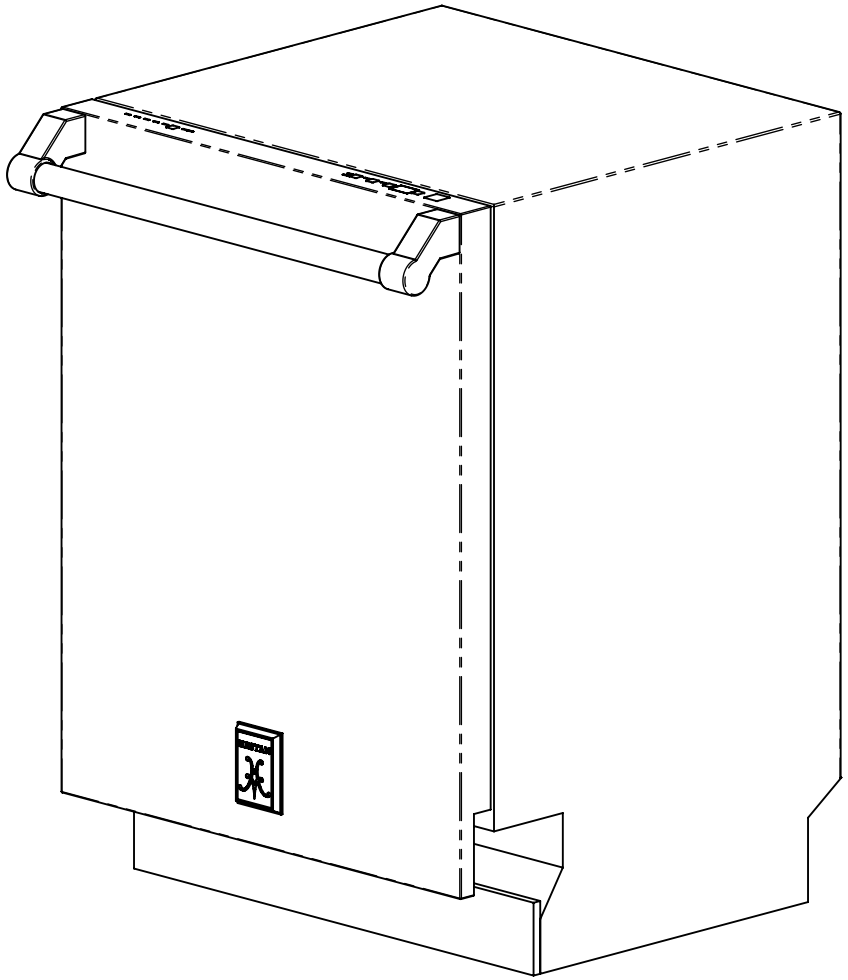

KDW24 SHOWN

HESTAN

PROPRIETARY
NO PART OF THIS DOCUMENT MAY BE REPRODUCED, STORED IN A RETRIEVAL SYSTEM, OR TRANSMITTED IN ANY FORM, WITHOUT THE WRITTEN PERMISSION OF Hestan Commercial Corporation. THIS DOCUMENT OR ANY COPIES SHALL BE RETURNED UPON WRITTEN REQUEST.

DESCRIPTION

SERVICE, DISHWASHER (KDW24)

DRAWING NO

KDW24-SERVICE

REVISION

A

SHEET NO.

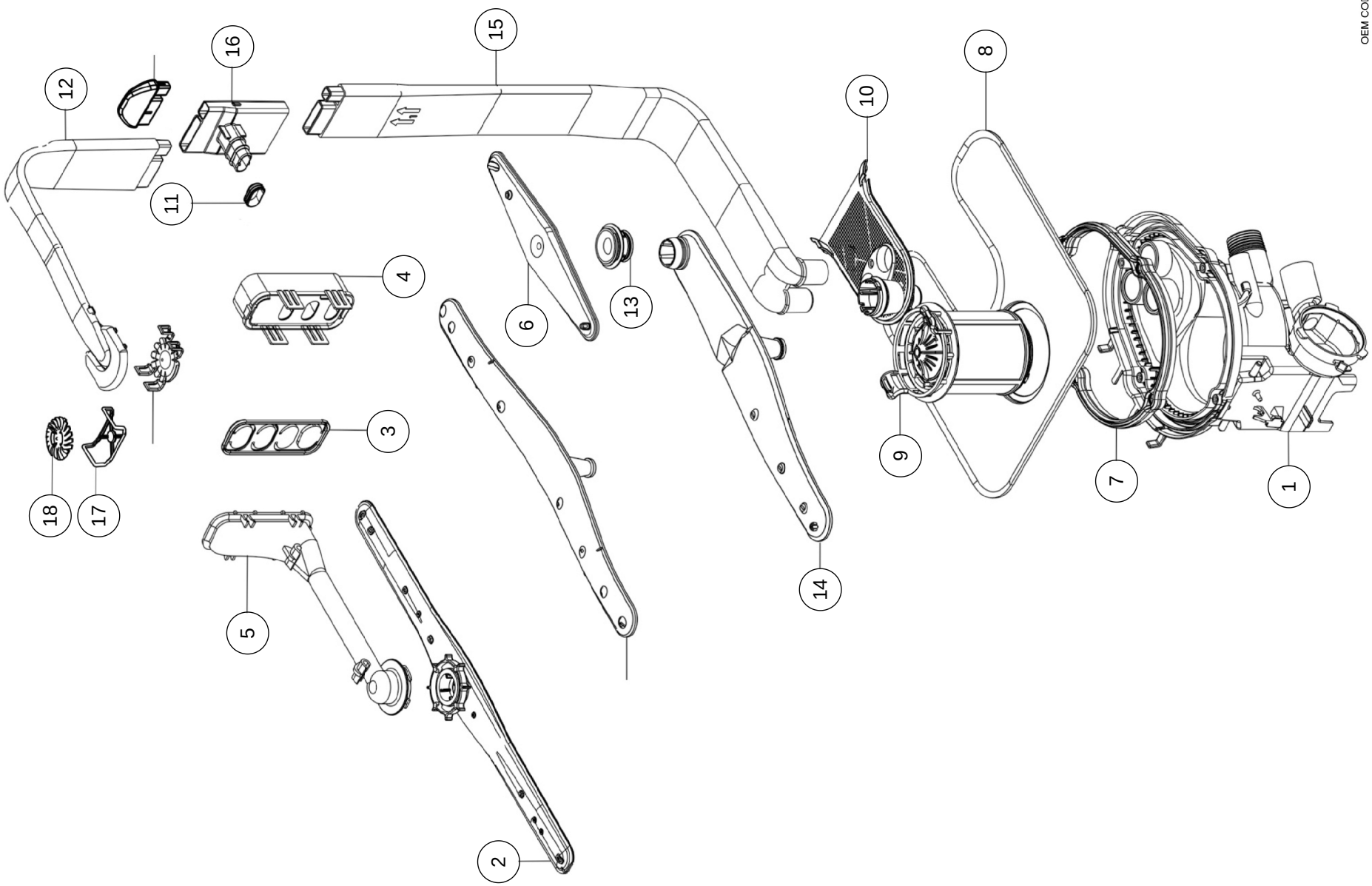

SECTION 1

HESTAN

PROPRIETARY
NO PART OF THIS DOCUMENT MAY BE REPRODUCED, STORED IN A RETRIEVAL SYSTEM, OR TRANSMITTED IN ANY FORM, WITHOUT THE WRITTEN PERMISSION OF Hestan Commercial Corporation. THIS DOCUMENT OR ANY COPIES SHALL BE RETURNED UPON WRITTEN REQUEST.

DESCRIPTION: **SERVICE, DISHWASHER (KDW24)**

DRAWING NO: **KDW24-SERVICE**

REVISION: **A**

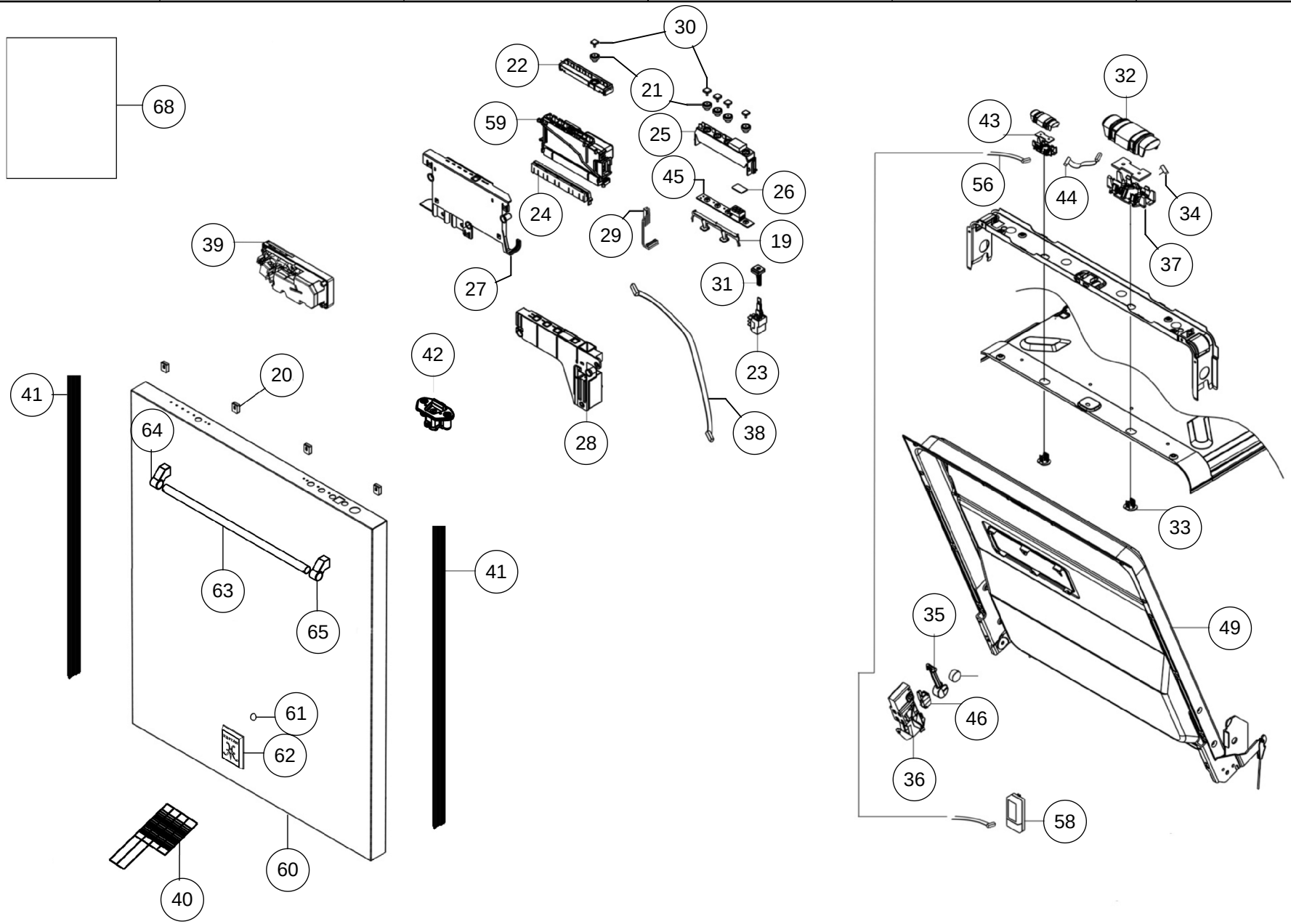

SECTION 2

OEM CODE: 184094

HESTAN

PROPRIETARY
NO PART OF THIS DOCUMENT MAY BE REPRODUCED, STORED IN A RETRIEVAL SYSTEM, OR TRANSMITTED IN ANY FORM, WITHOUT THE WRITTEN PERMISSION OF Hestan Commercial Corporation. THIS DOCUMENT OR ANY COPIES SHALL BE RETURNED UPON WRITTEN REQUEST.

DESCRIPTION: **SERVICE, DISHWASHER (KDW24)**

DRAWING NO: **KDW24-SERVICE**

REVISION: **A**

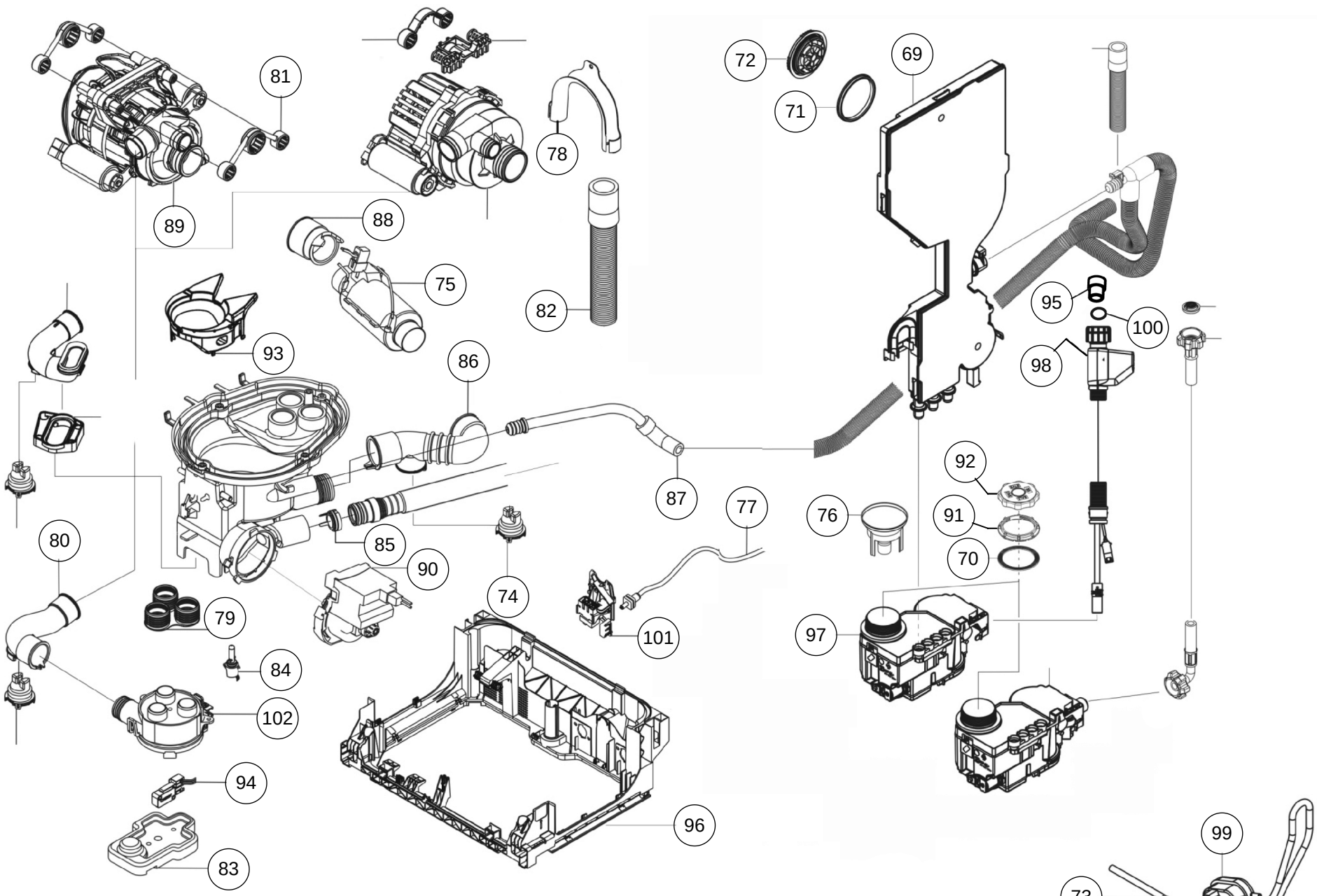

SECTION 3

OEM CODE: 184094

HESTAN

PROPRIETARY
NO PART OF THIS DOCUMENT MAY BE REPRODUCED, STORED IN A RETRIEVAL SYSTEM, OR TRANSMITTED IN ANY FORM, WITHOUT THE WRITTEN PERMISSION OF Hestan Commercial Corporation. THIS DOCUMENT OR ANY COPIES SHALL BE RETURNED UPON WRITTEN REQUEST.

DESCRIPTION: **SERVICE, DISHWASHER (KDW24)**

DRAWING NO: **KDW24-SERVICE**

REVISION: **A**

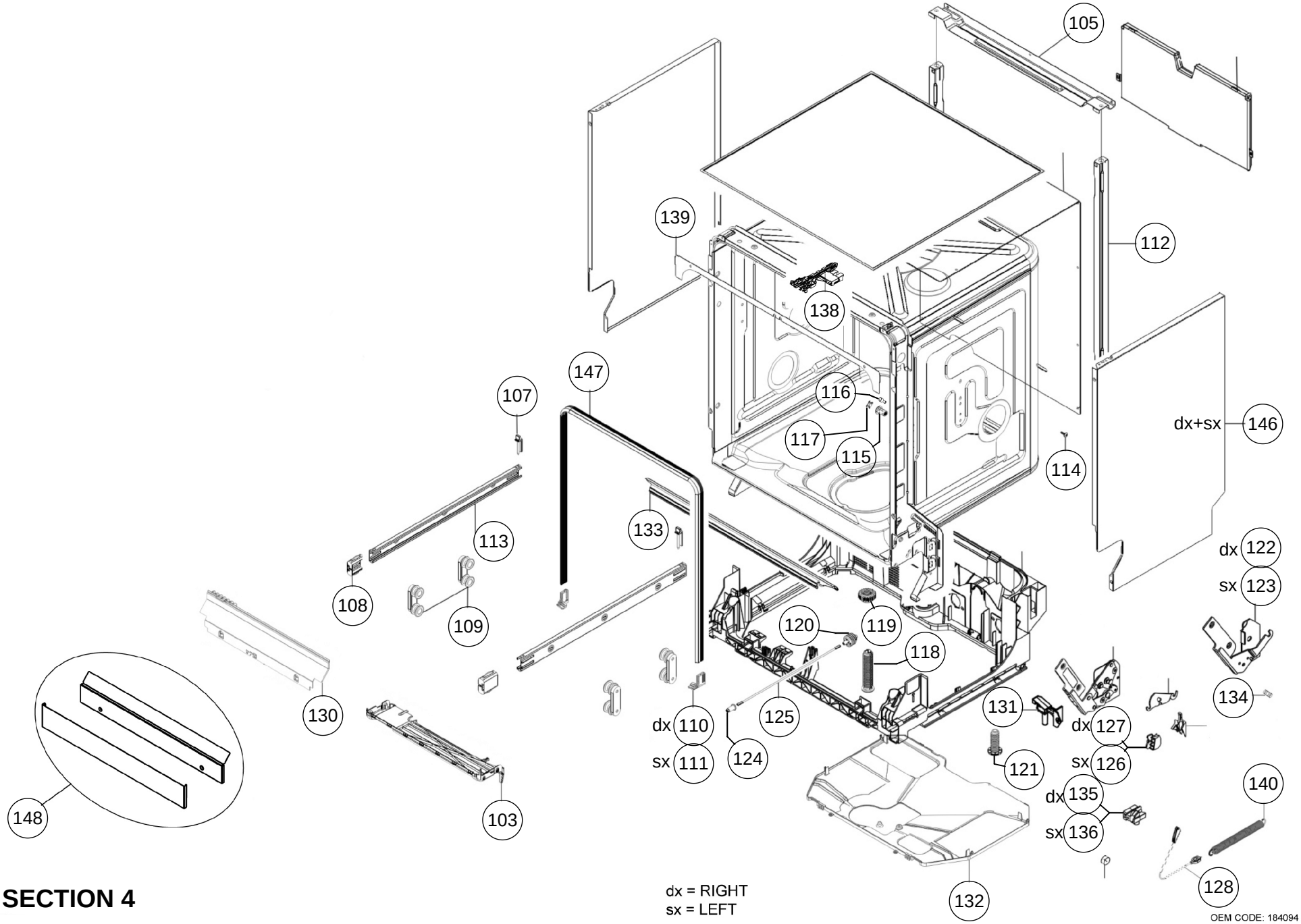

SECTION 4

dx = RIGHT
sx = LEFT

OEM CODE: 184094

HESTAN

PROPRIETARY
NO PART OF THIS DOCUMENT MAY BE REPRODUCED, STORED IN A RETRIEVAL SYSTEM, OR TRANSMITTED IN ANY FORM, WITHOUT THE WRITTEN PERMISSION OF Hestan Commercial Corporation. THIS DOCUMENT OR ANY COPIES SHALL BE RETURNED UPON WRITTEN REQUEST.

DESCRIPTION: **SERVICE, DISHWASHER (KDW24)**

DRAWING NO: **KDW24-SERVICE**

REVISION: **A**

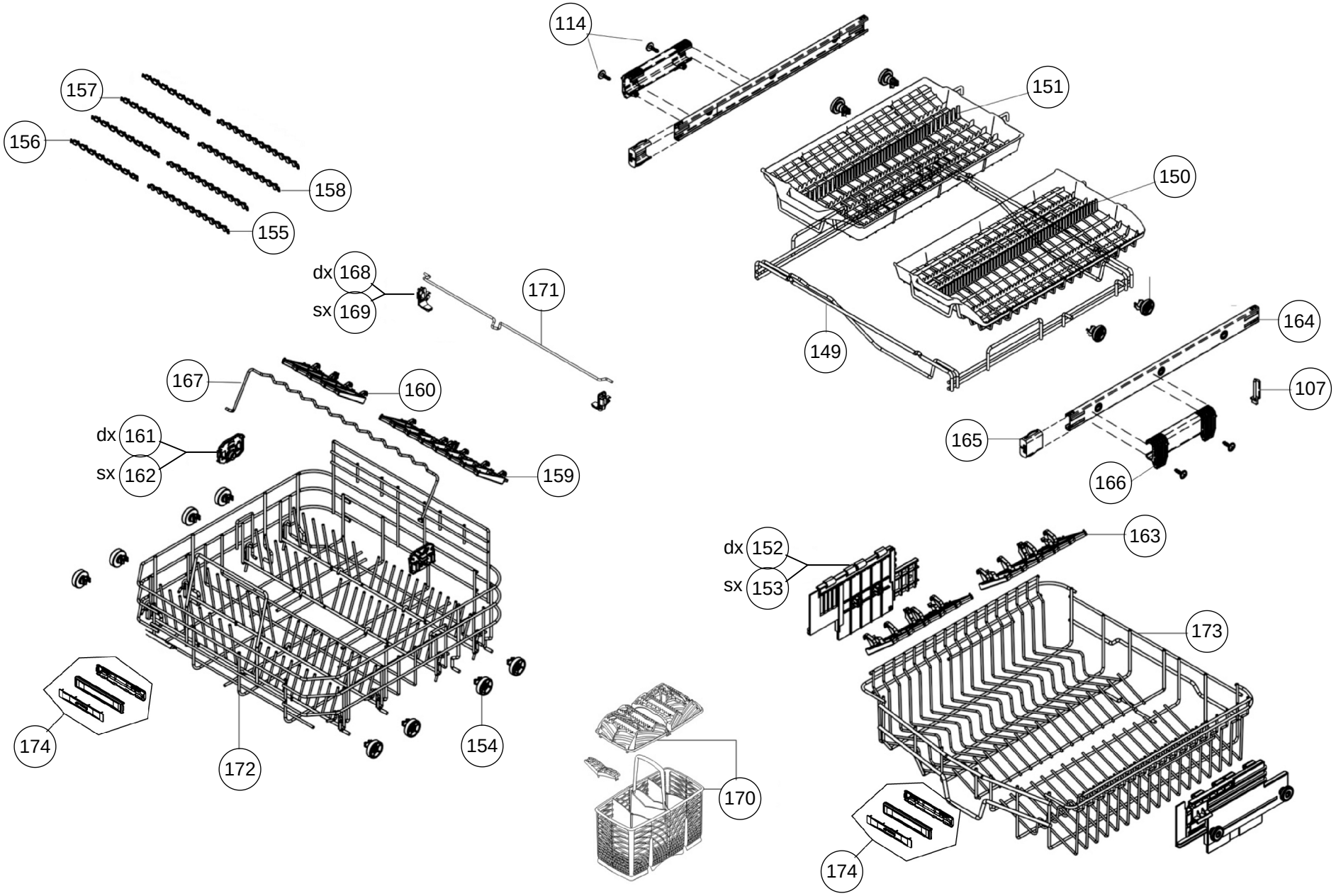

SECTION 5

OEM CODE: 184094

DX = RIGHT
SX = LEFT

HESTAN

PROPRIETARY
NO PART OF THIS DOCUMENT MAY BE REPRODUCED, STORED IN A RETRIEVAL SYSTEM, OR TRANSMITTED IN ANY FORM, WITHOUT THE WRITTEN PERMISSION OF Hestan Commercial Corporation. THIS DOCUMENT OR ANY COPIES SHALL BE RETURNED UPON WRITTEN REQUEST.

DESCRIPTION: **SERVICE, DISHWASHER (KDW24)**

DRAWING NO: **KDW24-SERVICE**

REVISION: **A**

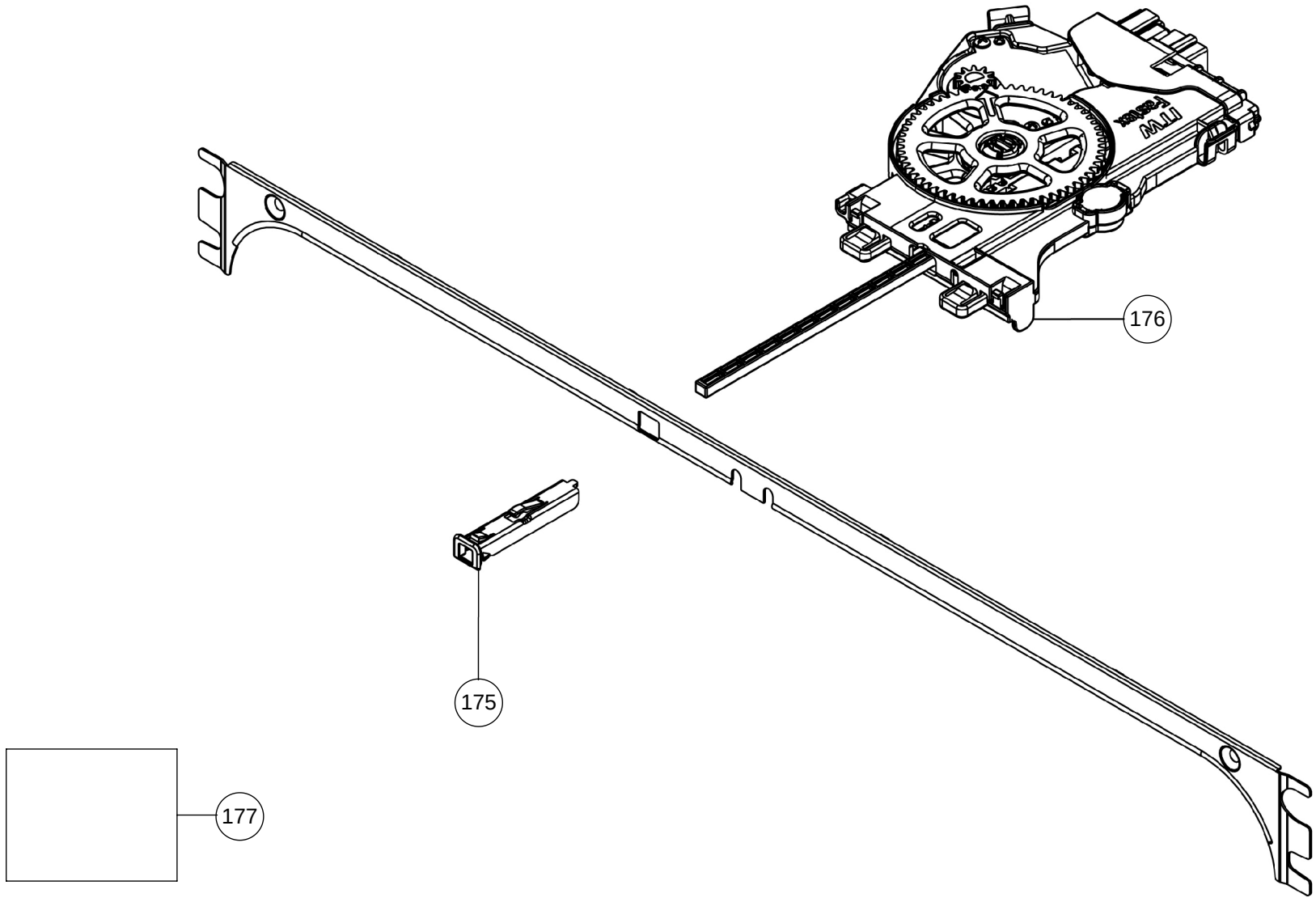

SECTION 6

OEM CODE: 184094

HESTAN

PROPRIETARY
NO PART OF THIS DOCUMENT MAY BE REPRODUCED, STORED IN A RETRIEVAL SYSTEM, OR TRANSMITTED IN ANY FORM, WITHOUT THE WRITTEN PERMISSION OF Hestan Commercial Corporation. THIS DOCUMENT OR ANY COPIES SHALL BE RETURNED UPON WRITTEN REQUEST.

DESCRIPTION: **SERVICE, DISHWASHER (KDW24)**

DRAWING NO: **KDW24-SERVICE**

REVISION: **A**

DISHWASHER PARTS LIST

KDW24 / KDW24-XX / KDW24-OV

Aug. 28, 2018

Sect. #	Balloon #	HESTAN Part Number	KDW24-OV	KDW24	KDW24-XX	Description	NOTES
1	1	023048	x	x	x	SUMP	
1	2	023049	x	x	x	UPPER SPRAY ARM	
1	3	023050	x	x	x	GASKET, 4 POSITIONS	
1	4	023051	x	x	x	DUCT SECTOR UPPER	
1	5	023052	x	x	x	DUCT FOR UPPER BASKET	
1	6	023053	x	x	x	SMALL ORBITAL SPRAY ARM	
1	7	023054	x	x	x	SUMP GASKET	
1	8	023055	x	x	x	ST. STEEL FILTER SCREEN	
1	9	023056	x	x	x	CENTRAL FILTER	
1	10	023057	x	x	x	LOWER SPRAY ARM SUPPORT	
1	11	023058	x	x	x	UPPER NOZZLE GASKET	
1	12	023059	x	x	x	UPPER SPRAY ARM SUPPLY TUBE	
1	13	023060	x	x	x	ORBITAL SPRAY ARM BUSHING	
1	14	023061	x	x	x	LOWER ORBITAL SPRAY ARM	
1	15	023062	x	x	x	INNER SUPPLY TUBE	
1	16	023063	x	x	x	INSERT, SUPPLY TUBE, UPPER	
1	17	023064	x	x	x	UPPER ROTATING NOZZLE SUPPORT	
1	18	023065	x	x	x	UPPER ROTATING NOZZLE	
2	19	023066	x	x	x	BLOCK, OPTIONS CARD	
2	20	023067	x	x	x	DOOR SPACER, STX	
2	21	023068	x	x	x	RUBBER SELECTOR BUTTON	
2	22	023069	x	x	x	VISOR, PROGRAMMER	
2	23	023070	x	x	x	PUSH-BUTTON S.BOARD	
2	24	023071	x	x	x	TIMER CARD SUPPORT	
2	25	023072	x	x	x	VISOR, OPTIONS CARD	
2	26	023073	x	x	x	VISOR, OPTIONS CARD, SMOKED	
2	27	023074	x	x	x	SUPPORT, PROTECTION, PROGRAM CARD	
2	28	023075	x	x	x	SUPPORT, PROTECTION, OPTIONS CARD	
2	29	023076	x	x	x	CABLE STRAP, OPTIONS	
2	30	023077	x	x	x	PUSH-BUTTON	
2	31	023078	x	x	x	PUSH-BUTTON, ON/OFF	
2	32	023079	x	x	x	PROTECTION CAP, LIGHT, TUB	
2	33	023080	x	x	x	LENS, LIGHT, INTERNAL TUB	
2	34	023081	x	x	x	CABLE, LED2, PLUG	
2	35	023082	x	x	x	PENDULUM, ANGLE DETECTION SYSTEM	
2	36	023083		x		HOUSING, ANGLE DETECTION SYSTEM	
2	37	023084	x	x	x	SUPPORT, PROTECTION, LIGHT, INTERNAL TANK	
2	38	023085	x	x	x	WIRING, SP. P3-L-END OF CYCLE	
2	39	023086	x	x	x	DISPENSER, DETERGENT	
2	40	023087	x	x	x	WIRE PROTECTION	
2	41	023088	x	x	x	GASKET OPTION USA 860 FF	
2	42	023089	x	x	x	LATCH, TUB	
2	43	023090	x	x	x	CARD, LED, INTERIOR LIGHT, WHITE	
2	44	023091	x	x	x	WIRING, LED1 - LED2 DOS	
2	45	023092	x	x	x	CARD, OPTIONS STH60 4G, WHITE	

HESTAN

PROPRIETARY
NO PART OF THIS DOCUMENT MAY BE REPRODUCED, STORED IN A RETRIEVAL SYSTEM, OR TRANSMITTED IN ANY FORM, WITHOUT THE WRITTEN PERMISSION OF Hestan Commercial Corporation. THIS DOCUMENT OR ANY COPIES SHALL BE RETURNED UPON WRITTEN REQUEST.

DESCRIPTION: SERVICE, DISHWASHER (KDW24)

DRAWING NO: KDW24-SERVICE

REVISION: A

Sect. #	Balloon #	HESTAN Part Number	KDW24-OV	KDW24	KDW24-XX	Description	NOTES
2	46	023093	x	x	x	MICROSWITCH, AQS. RST2.5 3A, UL	
2	47	023094	x		x	INSERT, UPPER, SLIDING DOOR SUPPORT, RIGHT	
2	48	023095	x		x	INSERT, UPPER, SLIDING DOOR SUPPORT, LEFT	
2	49	023096	x	x	x	INNER DOOR ASSY.	
2	50	023097					
2	51	023098	x			TEMPLATE, DOOR FIXING, ST. STEEL 820	
2	52	023099	x		x	INSERT, LOWER, SLIDING DOOR SUPPORT, LEFT	
2	53	023100	x		x	INSERT, LOWER, SLIDING DOOR SUPPORT, RIGHT	
2	54	023101	x		x	HOUSING, ANGLE DETECTION SYSTEM, SLIDING DOOR	
2	55	023102	x		x	SPACER, SLIDING DOOR	
2	56	023103	x	x	x	CABLE, 4G6STR	
2	57	023104	x		x	TIMER, 105FW082MD554PAR045	
2	58	023105	x	x	x	POWER SUPPLY, 100-240V / 190 mA	
2	59	023106		x		TIMER, 105FW082MD554PAR047	
2	60	023107		x		OUTER DOOR SKIN, HESTAN	
2	61	010517		x		RETAINING RING, EXTERNAL, .125" DIAMETER SHAFT	
2	62	001834		x		LOGO, HESTAN, 3.5 X 2.5	
2	63	020671		x		HANDLE, HESTAN, DISHWASHER	
2	64	000463		x		ENDCAP, HANDLE, LH, SM	
2	65	000704		x		ENDCAP, HANDLE, RH, SM	
2	66	023108	x		x	OUTER DOOR SKIN, HESTAN	
2	67	021580			x	PANEL, DOOR, HESTAN 860	
2	68	020054	x	x	x	MANUAL, USE & CARE, DISHWASHER	
3	69	023110	x	x	x	AIR BREAK	
3	70	023111	x	x	x	GASKET, WATER SOFTENER	
3	71	023112	x	x	x	GASKET, LOAD RING	
3	72	023113	x	x	x	LOAD RING	
3	73	023114	x	x	x	TUBE FOR PRESSURE SWITCH	
3	74	023115	x	x	x	TURBIDITY SENSOR ST1124	
3	75	023116	x	x	x	HEATER BLK D32 115V	
3	76	023117	x	x	x	FUNNEL FOR SALT	
3	77	023118	x	x	x	POWER CORD	
3	78	023119	x	x	x	CURVE, DRAIN PIPE	
3	79	023120	x	x	x	GASKET, ALTER. WASH VALVE	
3	80	023121	x	x	x	TUBE, PUMP, ALTER. WASH VALVE	
3	81	023122	x	x	x	MOTOR SUPPORT, RUBBER	
3	82	023123	x	x	x	DRAIN HOSE	
3	83	023124	x	x	x	POLYSTYRENE WATER-STOP	
3	84	023125	x	x	x	PROBE, NTC	
3	85	023126	x	x	x	VALVE, ANTI-OVERFLOW	
3	86	023127	x	x	x	HOSE, SUMP-BLK32	
3	87	023128	x	x	x	HOSE, SUMP-WATER SOFTENER	
3	88	023129	x	x	x	HOSE, PUMP-BLK32	
3	89	023130	x	x	x	WASH PUMP, 115/60	
3	90	023131	x	x	x	DRAIN PUMP, 120/60	

HESTAN

PROPRIETARY
NO PART OF THIS DOCUMENT MAY BE REPRODUCED, STORED IN A RETRIEVAL SYSTEM, OR TRANSMITTED IN ANY FORM, WITHOUT THE WRITTEN PERMISSION OF Hestan Commercial Corporation. THIS DOCUMENT OR ANY COPIES SHALL BE RETURNED UPON WRITTEN REQUEST.

DESCRIPTION: **SERVICE, DISHWASHER (KDW24)**

DRAWING NO: **KDW24-SERVICE**

REVISION: **A**

Sect. #	Balloon #	HESTAN Part Number	KDW24-OV	KDW24	KDW24-XX	Description	NOTES
3	91	023132	x	x	x	LOCKRING, WATER SOFTENER	
3	92	023133	x	x	x	CAP, WATER SOFTENER	
3	93	023134	x	x	x	COVER, SUMP	
3	94	023135	x	x	x	MICROSWITCH, AQUASTOP	
3	95	023136	x	x	x	RACC.X TUBE AEG CANADA	
3	96	023137	x	x	x	BASE ASSY.	
3	97	023138	x	x	x	WATER SOFTENER	
3	98	023139	x	x	x	INLET HOSE, AQUASTOP	
3	99	023140	x	x	x	PRESSURE SWITCH	
3	100	023141	x	x	x	GASKET, RACC.X TUBE AEG CANADA	
3	101	023142	x	x	x	NOISE REDUCTION FILTER	
3	102	023143	x	x	x	ELECTRO WASH VALVE, ALTER	
4	103	023144	x	x	x	PLINTH, INTEGRATED	
4	104	023145		x		LOWER STRIP	
4	105	023146	x	x	x	CROSSPIECE, UPPER	
4	106	023147	x		x	STEAM PROTECTION	
4,5	107	023148	x	x	x	LOCK PIN FOR BASKET	
4	108	023149	x	x	x	END BLOCK FOR GUIDES	
4	109	023150	x	x	x	SUPPORT+WHEELS ASSY.	
4	110	023151	x	x	x	SPLASH GUARD, RIGHT	
4	111	023152	x	x	x	SPLASH GUARD, LEFT	
4	112	023153	x	x	x	TANK SUPPORT BACK	
4	113	023154	x	x	x	UPPER RACK SLIDES 430	
4,5	114	023155	x	x	x	SCREW, SPECIAL, HILOW, 5.5X18mm	
4	115	023156	x	x	x	DOOR CENTERING PLUG	
4	116	023157	x	x	x	INSERT, DOOR CENTERING PLUG	
4	117	023158	x	x	x	CAP, DOOR CENTERING PLUG	
4	118	023159	x	x	x	BACK ADJUSTABLE FOOT	
4	119	023160	x	x	x	RING NUT, BACK ADJUSTABLE FOOT	
4	120	023161	x	x	x	SCREW, THREADED ROD, ADJUSTABLE FOOT	
4	121	023162	x	x	x	ADJUSTABLE FOOT	
4	122	023163		x		HINGE, RIGHT	
4	123	023164		x		HINGE, LEFT	
4	124	023165	x	x	x	CAP FOR ADJUSTABLE FOOT	
4	125	023166	x	x	x	THREADED ROD, ADJUSTABLE FOOT	
4	126	023167	x	x	x	CLUTCH, HINGE, SMALL, LEFT	
4	127	023168	x	x	x	CLUTCH, HINGE, SMALL, RIGHT	
4	128	023169		x		CORD FOR HINGES	
4	129	023170					
4	130	023171					
4	131	023172		x		LIGHT, FLOOR	
4	132	023173	x	x	x	TRAY FOR WATER	
4	133	023174	x	x	x	GASKET, LOWER TUB	
4	134	023175	x	x	x	PIN, SPRING	
4	135	023176		x		CLUTCH, HINGE, LARGE + PIN, RIGHT	

HESTAN

PROPRIETARY
NO PART OF THIS DOCUMENT MAY BE REPRODUCED, STORED IN A RETRIEVAL SYSTEM, OR TRANSMITTED IN ANY FORM, WITHOUT THE WRITTEN PERMISSION OF Hestan Commercial Corporation. THIS DOCUMENT OR ANY COPIES SHALL BE RETURNED UPON WRITTEN REQUEST.

DESCRIPTION
SERVICE, DISHWASHER (KDW24)

DRAWING NO
KDW24-SERVICE

REVISION
A

Sect. #	Balloon #	HESTAN Part Number	KDW24-OV	KDW24	KDW24-XX	Description	NOTES
4	136	023177		x		CLUTCH, HINGE, LARGE + PIN, LEFT	
4	137	023178	x		x	CORD FOR HINGES F.V. 820	
4	138	023179	x	x	x	DOORLOCK ASSEMBLY	
4	139	023180	x	x	x	PROFILE MASK, DOS	
4	140	023181	x	x	x	SPRING, TRACTION	
4	141	023182	x		x	CLUTCH, HINGE, LARGE, RIGHT + PIN-16	
4	142	023183	x		x	CLUTCH, HINGE, LARGE, LEFT + PIN-16	
4	143	023184	x		x	LIGHT, FLOOR, SLIDING DOOR	
4	144	023185	x		x	HINGE, LEFT, SLIDING DOOR	
4	145	023186	x		x	HINGE, RIGHT, SLIDING DOOR	
4	146	023187	x	x	x	SIDE PANEL ASSEMBLY, LEFT + RIGHT, SLIDING	
4	147	023188	x	x	x	GASKET, TUB	
4	148	023189	x	x	x	BASEBOARD, ADJUSTABLE	
5	149	023190	x	x	x	RACK, TELESCOPIC + WHEELS	
5	150	023191	x	x	x	ASSY. INSERT, 3RD BASKET, RIGHT	
5	151	023192	x	x	x	ASSY. INSERT, 3RD BASKET, LEFT	
5	152	023193	x	x	x	BASKET HEIGHT ADJUST, RIGHT	
5	153	023194	x	x	x	BASKET HEIGHT ADJUST, LEFT	
5	154	023196	x	x	x	WHEEL, LOWER BASKET	
5	155	023197	x	x	x	INSERT 12 WIRES	
5	156	023198	x	x	x	INSERT 8 WIRES	
5	157	023199	x	x	x	INSERT 7 WIRES	
5	158	023200	x	x	x	INSERT 13 WIRES	
5	159	023201	x	x	x	FOLDING GLASS RACK, LOWER, LONG	
5	160	023202	x	x	x	FOLDING GLASS RACK, LOWER, SHORT	
5	161	023203	x	x	x	SUPPORT, GLASS HOLDER, LOWER, RIGHT	
5	162	023204	x	x	x	SUPPORT, GLASS HOLDER, LOWER, LEFT	
5	163	023205	x	x	x	FOLDING GLASS RACK, UPPER	
5	164	023206	x	x	x	SLIDES, 3RD BASKET	
5	165	023207	x	x	x	END BLOCK FOR GUIDES, 3RD BASKET	
5	166	023208	x	x	x	SUPPORT, SLIDES, 3RD BASKET	
5	167	023209	x	x	x	SUPPORT, GLASS RACK	
5	168	023210	x	x	x	INSERT, RIGHT, DISHES	
5	169	023211	x	x	x	INSERT, LEFT, DISHES	
5	170	023212	x	x	x	ASSY. CUTLERY BASKET	
5	171	023213	x	x	x	INSERT, BASKET, DISHES SUPPORT	
5	172	023214	x	x	x	LOWER RACK	
5	173	023215	x	x	x	UPPER RACK	
5	174	023216	x	x	x	BASKET HANDLE	
6	175	023217	x	x	x	CENTERING DEVICE, DOOR, DOS	
6	176	023218	x	x	x	MOTOR ASSY., DOOR, DOS	
6	177	023109	x	x	x	DIAGRAM, WIRING, DISHWASHER	

HESTAN

PROPRIETARY
NO PART OF THIS DOCUMENT MAY BE REPRODUCED, STORED IN A RETRIEVAL SYSTEM, OR TRANSMITTED IN ANY FORM, WITHOUT THE WRITTEN PERMISSION OF Hestan Commercial Corporation. THIS DOCUMENT OR ANY COPIES SHALL BE RETURNED UPON WRITTEN REQUEST.

DESCRIPTION
SERVICE, DISHWASHER (KDW24)

DRAWING NO
KDW24-SERVICE

REVISION
A