36" ALL GAS RANGES

STANDARD FEATURES

- Heavy-duty cast-iron grates provide a continuous uninterrupted and maximized cooking surface for best in class coverage. In combination with brass sealed burner and burner bowl, designed to optimize combustion efficiency to produce top cooking performance, including the fastest time-to-boil.
- Award winning CircuFlame™ brass sealed center power burner provides 30,000 Btu/hour of high-performance cooking power, featured in Michelin starred restaurants and used by the top chefs around the country. - 5 burner (365) configuration only.
- High performance dual-flow burner system allows for significant turndown capability from high Btu performance (23,000 Btu/hour *Front Burners*) to low continuous simmer (500 Btu/hour *All Burners*). - NG

CircuFlame™ Burner (365 only)

Simmer Flame at 500 Btu

Back-lit knobs

- Patent pending, diamond stainless steel burner bowl, emphasizes the CircuFlame™ power burner. Allows for ease of cleaning with a water tight seal. - 5 burner (365) configuration only.
- Exclusive raised pattern burner cap design that is easy to remove and clean.
- Robust electronic ignition/re-ignition capability to provide safety and proper gas ignition. Igniter will continue to spark until the burner flame is established, and re-ignite in the case of flame blow out.
- Exclusive PureVection™ technology, electronically controls multiple heating convection systems, to optimize baking, broiling, roasting and convection baking. Achieved by alternating and adjusting the levels of heat and air circulation needed to produce the best result.
- 5.8 Cu. Ft heavy duty, porcelain enameled oven cavity interior for even heat distribution. Concealed bake and convection fan designed for ease of cleaning and more usable capacity.
- 20,000 Btu/hour infra-red broiler for intense searing and finishing
- Gentle-close door feature is counterbalanced.
- Distinctly angled oven door, commercial grade end caps and Marquise accented™ handle and control panel whic,h hides fingerprints, are ergonomically designed for ease of opening and closing of oven door.
- Extra-wide glass oven window provides improved viewing area while keeping temperatures outside cool to touch
- Three professional oven racks with (6) position rack supports, glide easily for convenient access.
- Soft-on & off oven interior lighting.
- Elegantly backlit control knobs add functionality and brilliant illumination.
- Zamak die-cast range and oven control knobs.
- Comes standard with Island Trim

KRG 365 Model Shown with Accessory 10" Backguard KBGLB

GD configurations only

- 1/4" thick stainless steel robotically welded griddle plate.
- High performance infra- red gas burner system.
- Thermostatically controlled.
- Teflon coated front grease tray for ease of cleaning.

OPTIONS & ACCESSORIES

- Available in Twelve (12) Hestan signature color finishes
- Backguards : Low Back 10" and High Shelf 20"
- Natural Gas (NG) or Liquid Propane (LP)
- Wok Ring
- Gas conversion kits (NG/LP)
- High altitude kit

36" ALL GAS RANGES

www.hestanhome.com phone 888.905.7463 3375 E. La Palma Ave., Anaheim, CA 92806

HESTAN

36” ALL GAS RANGES

INSTALLATION CLEARANCES WITH ISLAND TRIM

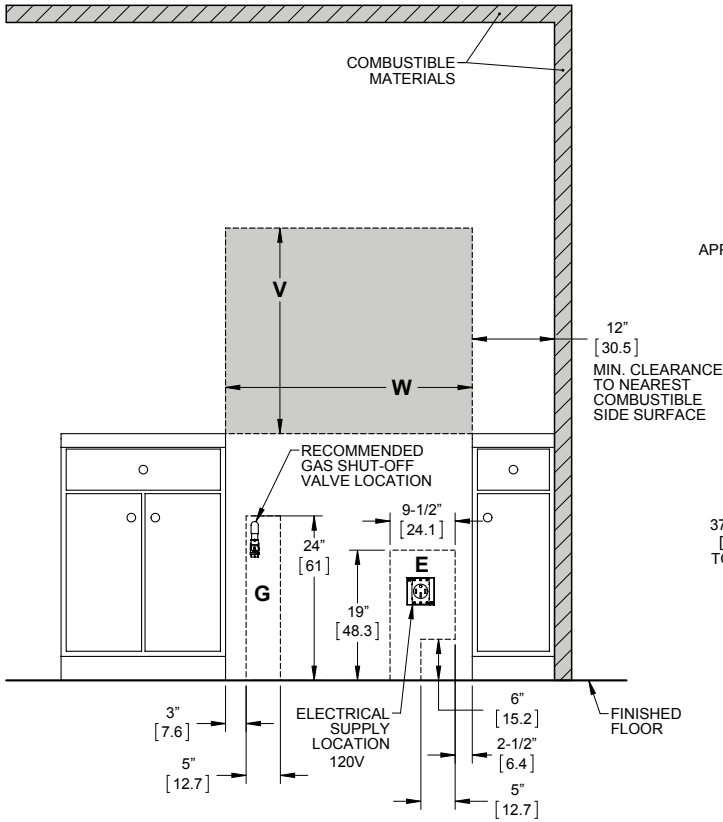

FRONT VIEW

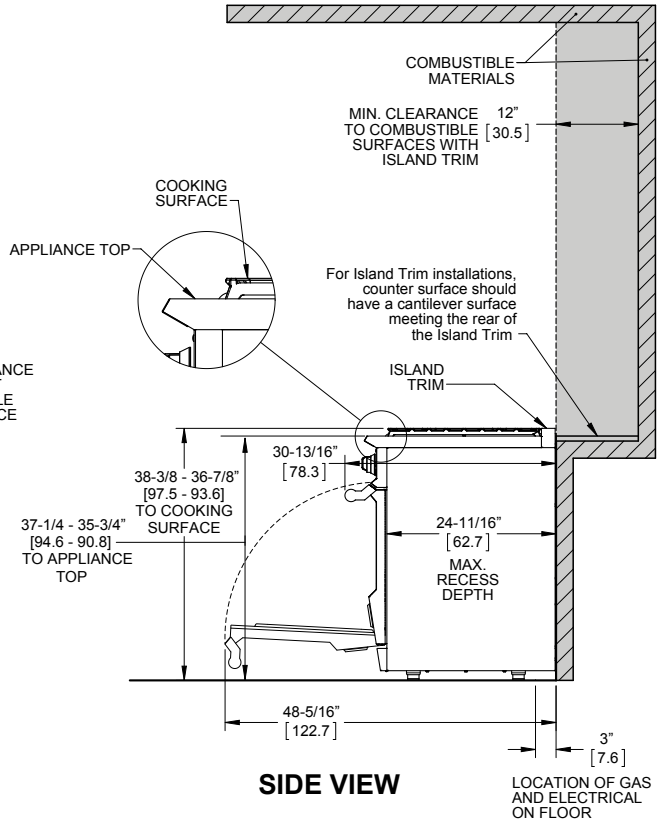

SIDE VIEW

NOTES:
* SHADED AREAS INDICATE WHERE COMBUSTIBLE MATERIALS ARE NOT ALLOWED.
* APPLIANCE TOP MUST BE LEVEL OR HIGHER THAN THE ADJACENT COUNTERTOP SURFACES.
* "G" IS GAS CONNECTION ZONE ON REAR WALL. MOUNT SHUT-OFF VALVE AS HIGH AS POSSIBLE IN THIS ZONE FOR EASY ACCESS WHEN RANGE IS INSTALLED.
* "E" IS ELECTRICAL SUPPLY ZONE.
* "W" IS APPLIANCE OPENING.
* "V" IS MIN. CLEARANCE TO REQUIRED VENTILATION HOOD.

DIMENSIONS IN BRACKETS [ ] ARE IN CM.

RANGE MODEL	W	V(min)
KRG365	36” [91.4]	30” [76.2]
KRG364GD	36” [91.4]	30” [76.2]

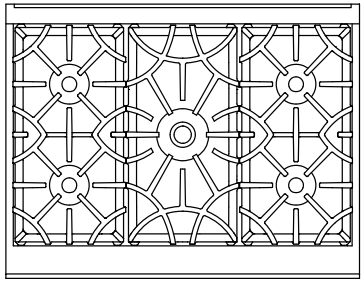

KRG365

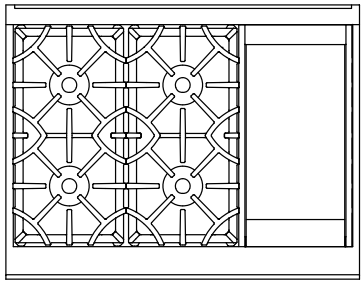

KRG364GD

ELECTRICAL REQUIREMENTS :
110/120V, 60Hz, 20 amps

GAS REQUIREMENTS : ½” NPT gas connection. Minimum gas supply is 7” water column for natural gas and 11” for propane. Operating pressure at the manifold is 5” water column for natural gas and 10” for propane. All units require a regulated gas supply. (included)

Hestan Indoor products are approved for indoor use only. Hestan Commercial Corporation reserves the right to change materials and specifications without notice. Specify type of gas when ordering.

ALL Models	Description	Cutout Dimensions W (in.)	Cutout Dimensions D (in.)	Total BTU’s (NG)	Circuit Breaker Req	Griddle BTU	Approx SHP WT (lbs)
KRG365-NG/-LP	36” Range 5 Burner	36”	24-1/2”	157, 000	20 Amp	--	490
KRG364GD-NG/-LP	36” Range 4 Burner with Griddle	36”	24-1/2”	127, 000	20 Amp	20,000	490

Intertek

CONTACT US: www.hestanhome.com phone 888.905.7463 3375 E. La Palma Ave., Anaheim, CA 92806