AGAD36: DOUBLE ACCESS DOORS, MARQUISE, 36"

HESTAN

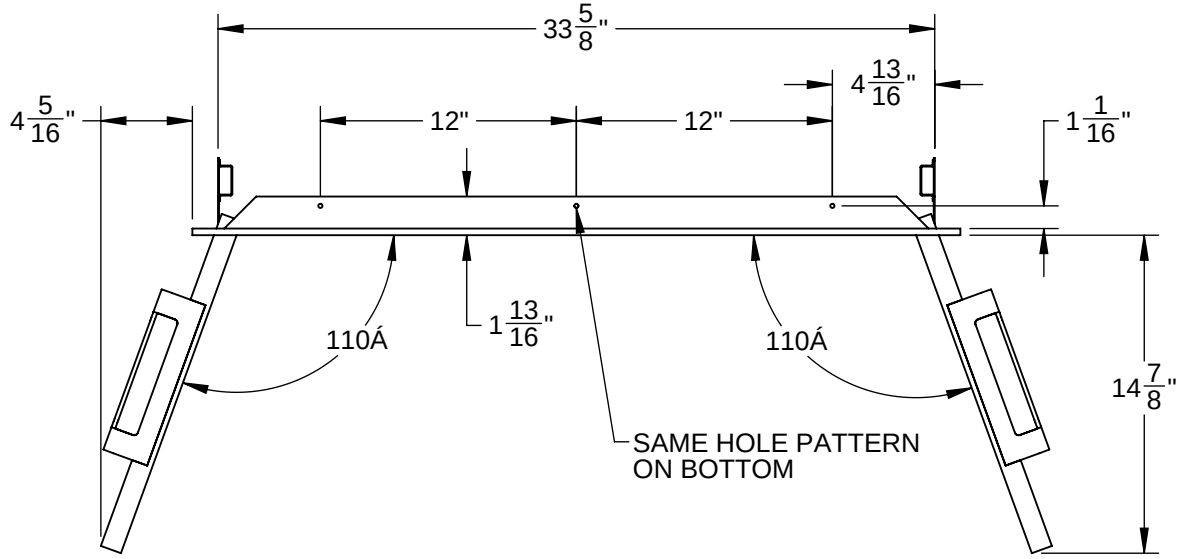

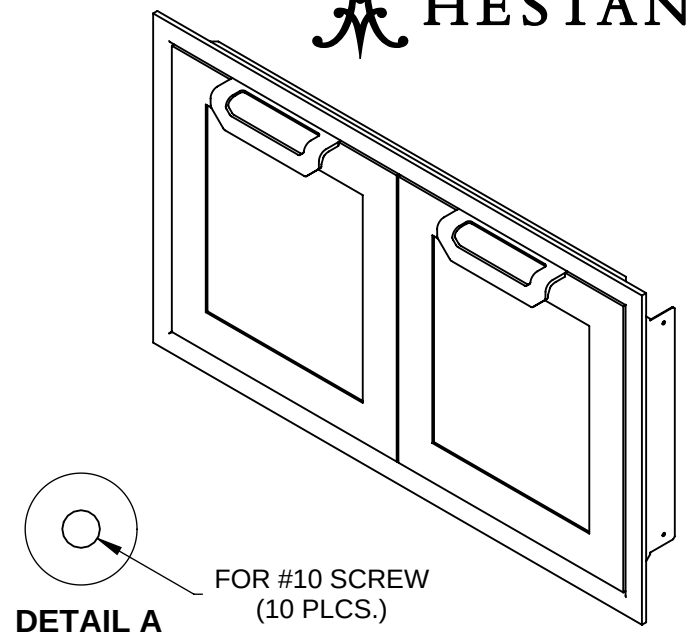

DETAIL A
SCALE 1 : 1

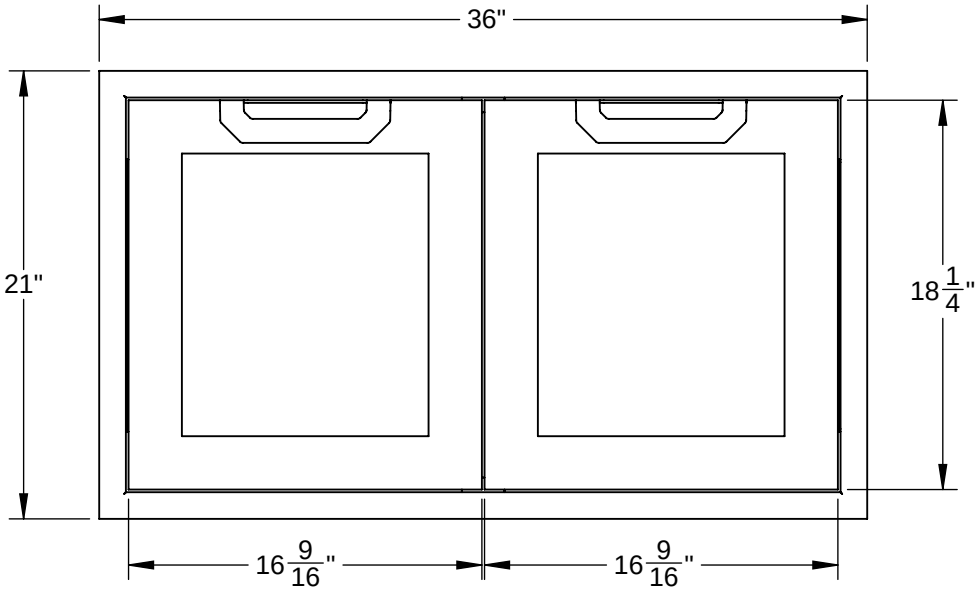

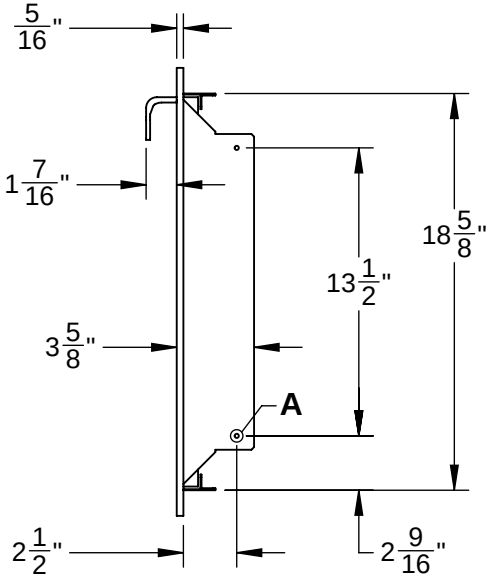

CUTOUT DIMENSIONS:
19" H - 33 7/8" W

Revised: 09/12/2018