AGADL18: SINGLE ACCESS DOOR, HINGE LEFT, MARQUISE, 18"

HESTAN

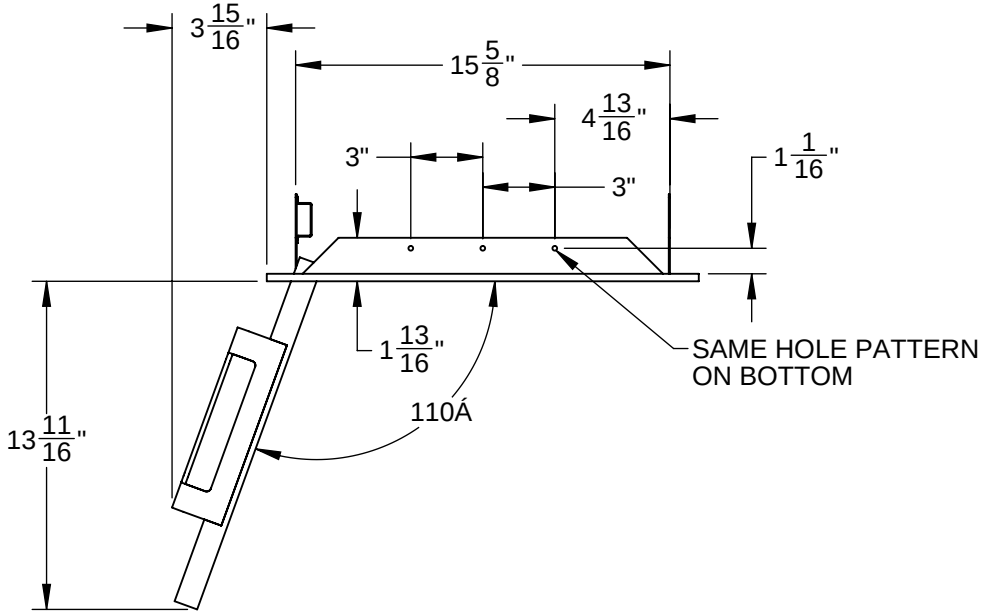

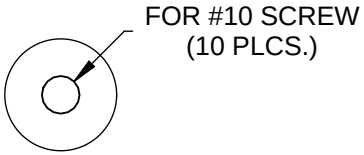

DETAIL A
SCALE 1 : 1

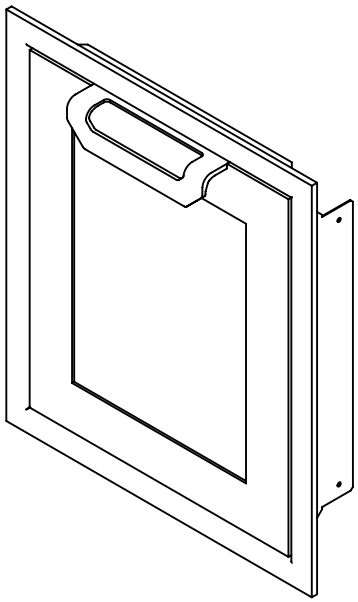

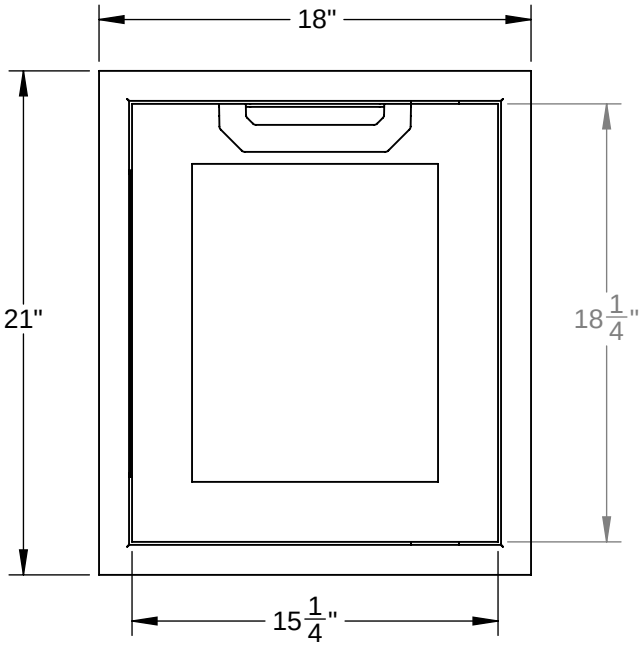

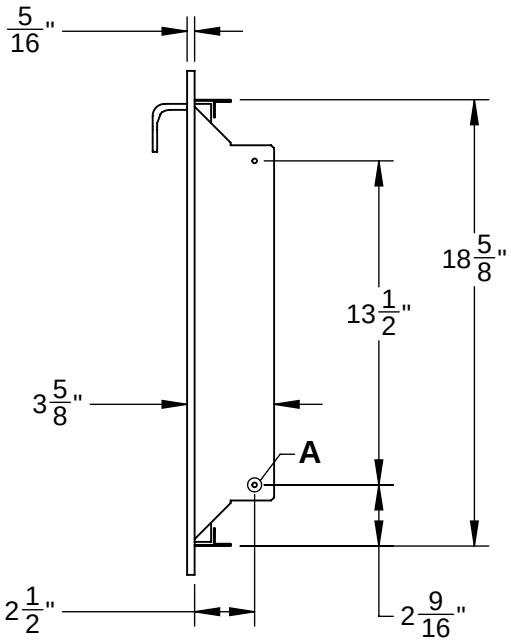

CUTOUT DIMENSIONS:
19" H - 15 7/8" W

Revised: 09/12/2018