AGADL24: SINGLE ACCESS DOOR, HINGE LEFT, MARQUISE, 24"

HESTAN

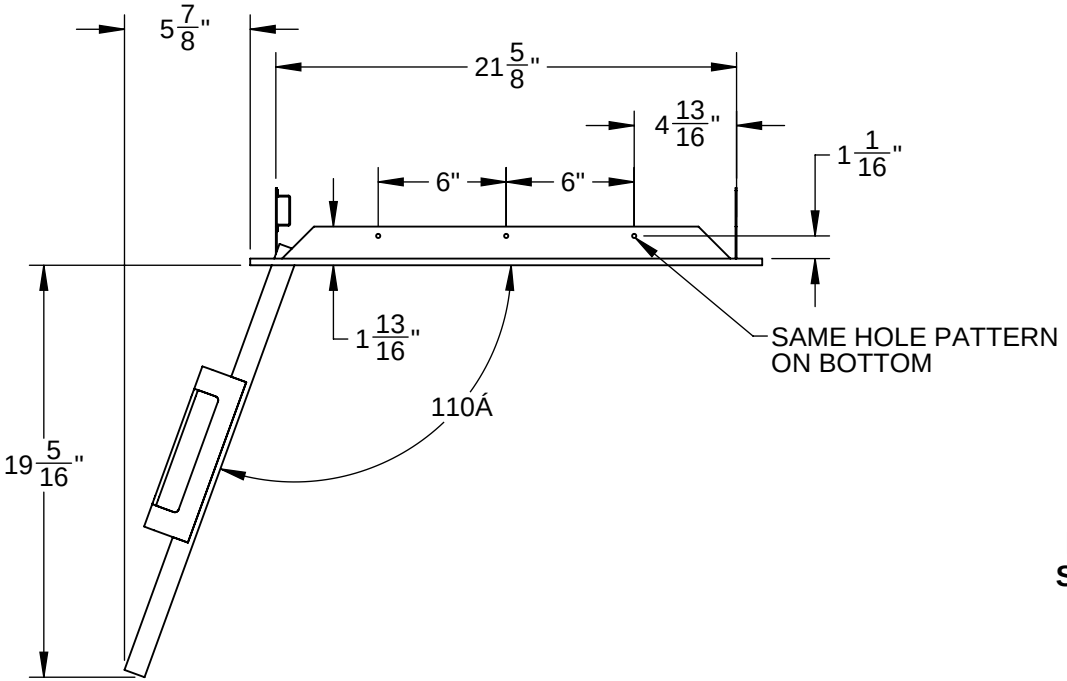

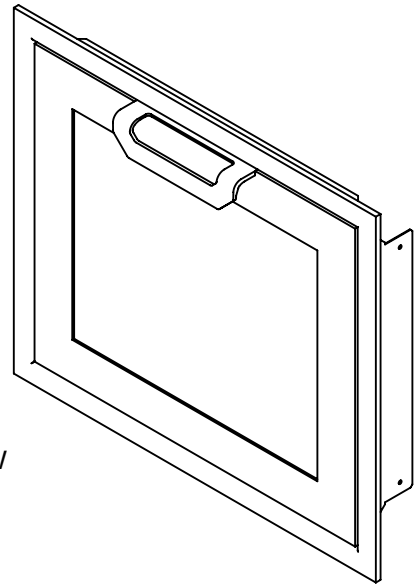

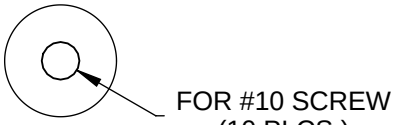

DETAIL A
SCALE 1 : 1

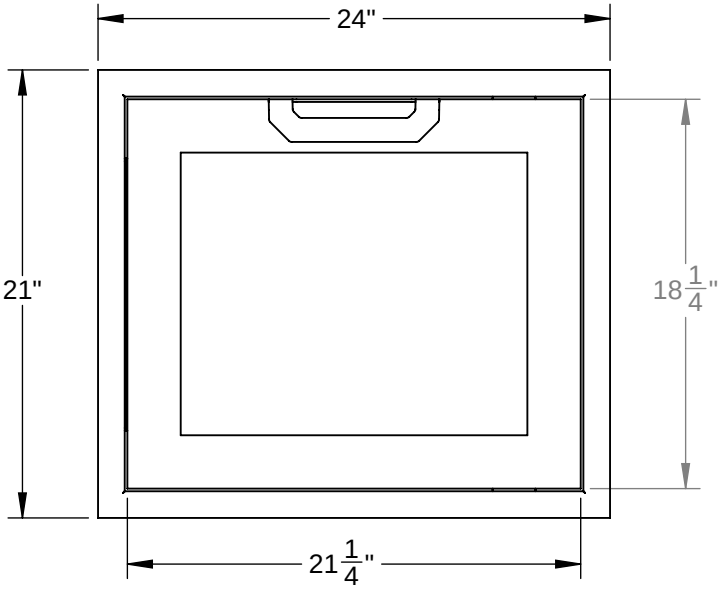

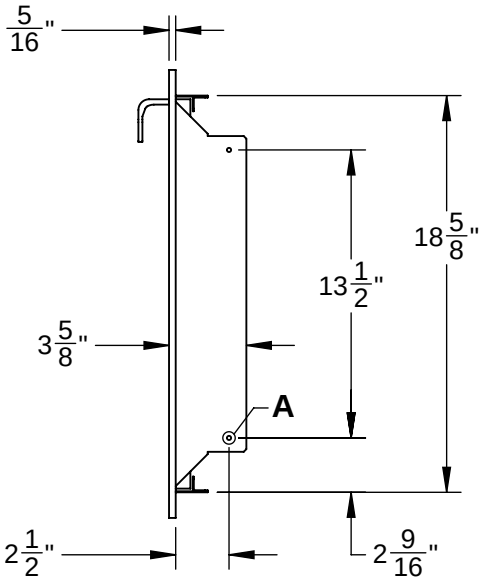

CUTOUT DIMENSIONS:
19" H - 21 7/8" W

Revised: 09/12/2018