AGSR36: SINGLE STORAGE DRAWER, 36"

HESTAN

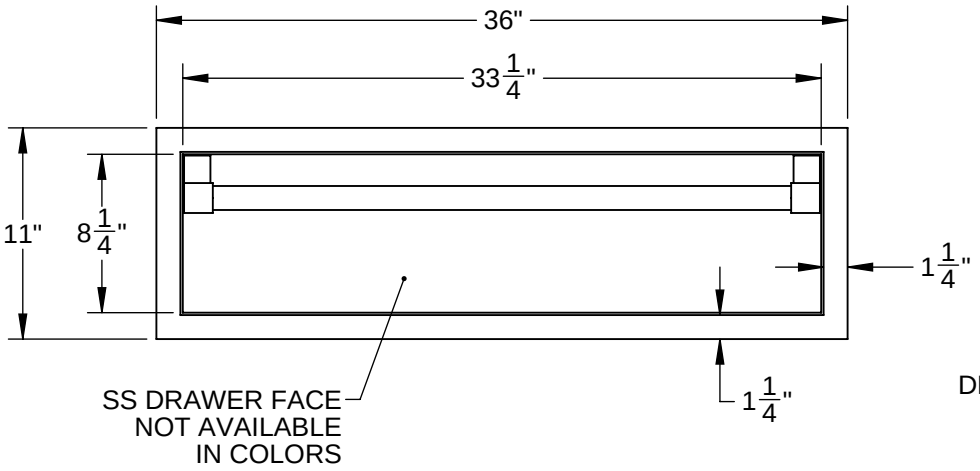

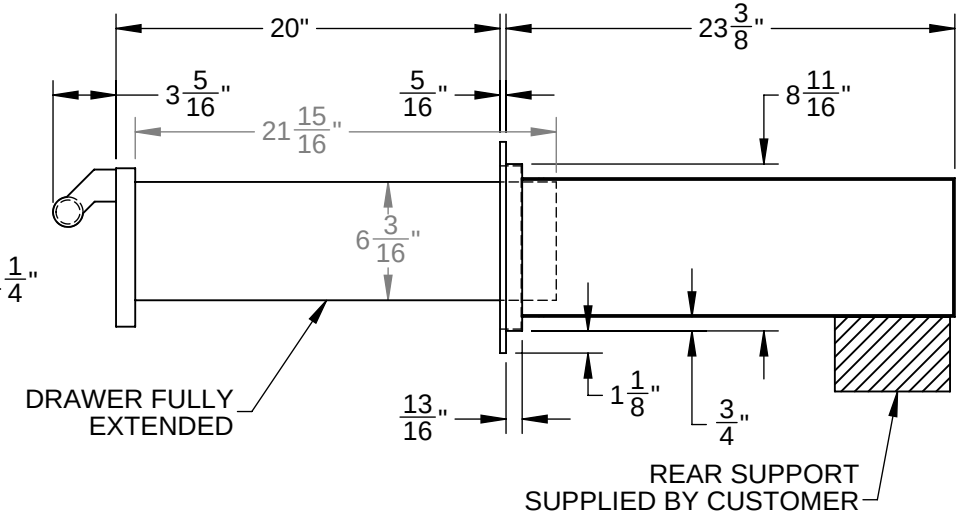

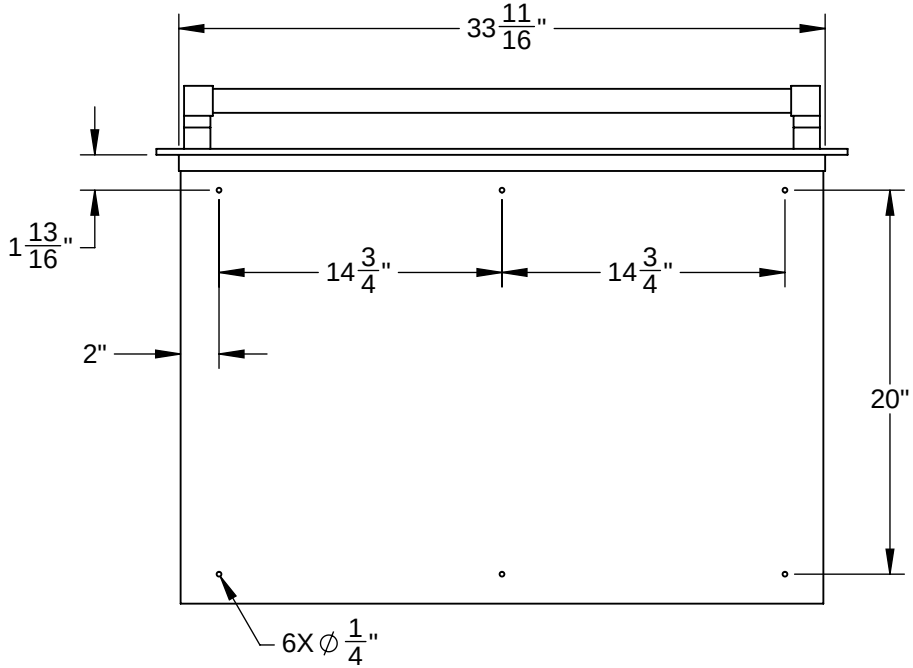

BOTTOM VIEW

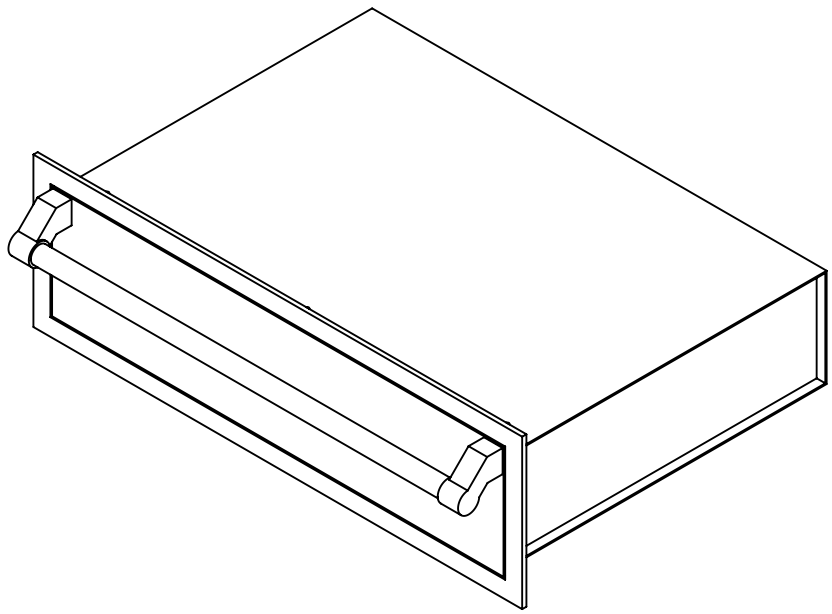

CUTOUT DIMENSIONS:
8 7/8" H - 33 7/8" W - 23 3/8" D

Revised: 09/12/2018